easyVS™
Single-channel Generator and Footswitch

User Manual

Rev.XI
2026-10-09

CE 0197

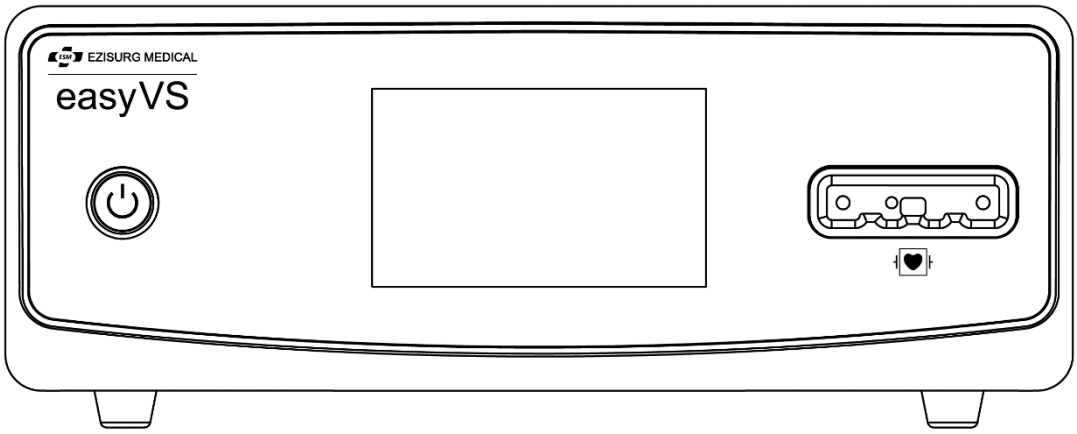

For generator VS01 and footswitch VFSU01

Ezisurg Medical Co., Ltd.

⚠ Please read all information carefully before use.

Important!

Please read all information carefully. Failure to properly follow the instructions may lead to serious surgical consequences.

1. This manual is designed to provide instructions for use of the generator VS01 for surgical vessel-sealing applications. It is not a reference to surgical techniques.
2. The VS01 generator should be used with the Sealer/Divider. Please refer Sealer/Divider User Manual for more information.
3. This manual contains important information for operation of VS01. It should be kept where it may be referenced during usage. Please print or copy pages as necessary to keep nearby.
4. Ezisurg Medical Co., Ltd reserves the right to change the electrical/electronic or mechanical configurations and components without notice. Schematic revisions may not match PCB revisions in the unit being maintained; consult Ezisurg Medical Co., Ltd before making any changes.
5. If circuit diagrams, component part lists, descriptions are required, please contact Ezisurg Medical Co., Ltd.
6. This user manual is only for software version 1 of the generator VS01. Software version other than version 1 may not match the diagram in the manual. Please examine the software version of the generator VS01 before starting maintenance; consult Ezisurg Medical Co., Ltd.
7. easyVS™ is the registered trademark of this product.

WARNING: No modification of this equipment is allowed.

Overview and General Features

This manual is applicable to the generator (with software embedded) and the footswitch. It does not include an integrated irrigation/suction system. It does not support the function of patient physiological parameter monitoring.

See Figure 1 for the diagram of generator and footswitch.

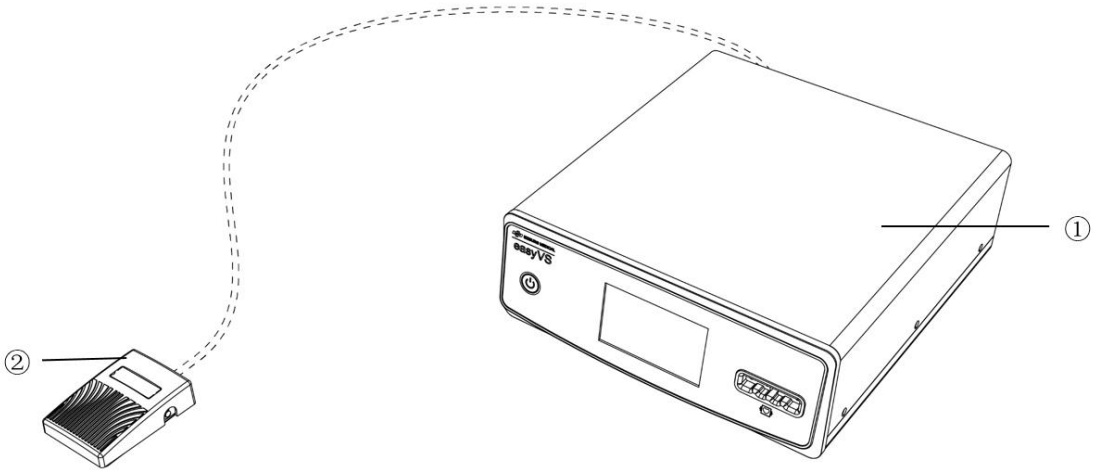

Figure 1 Diagram of Generator and Footswitch

①、generator（including software）②、footswitch

See Table 1 for the specifications of generator and footswitch.

Table 1 Specifications of Generator and Footswitch

Category	Product Code	Description
Generator	VS01	Bipolar electrosurgical generator
Footswitch	VFSU01	Designed for use with generator

Generator

The Generator VS01 is to generate high-frequency electrosurgical energy to drive the advanced bipolar instrument. In addition, generator provides Human Machine Interface to have user control, monitor, and diagnose the status of the device.

The Generator VS01 supplies energy to the advanced bipolar instrument. The generator is intended for use with Curved, Large Jaw, Open Sealer/Divider with Coating, including VSL18, and with Curved Jaw Open and Laparoscopic Sealer/Divider with Coating, including VSC23A, VSC37A and VSC44A. The Generator VS01 uses a touchscreen display interface and has a unique receptacle port that accepts the dedicated bipolar instrument.

Caution: This manual does not contain instructions for use of bipolar instrument.

Footswitch

Footswitch is the foot control part of the generator. It includes one pedals.

Notes: The footswitch is an optional accessory.

Device Introduction

Intended Purpose

The single-channel generator is an electrosurgical generator intended for use with compatible sealing devices. It is indicated for sealing vessels, tissue bundles and lymphatics.

Indications for use

The easyVS™ Single-channel generator is a high frequency electrosurgical generator. When used with compatible sealing devices, it is indicated for use in sealing (fusing) vessels up to, and including, 7 mm in diameter, tissue bundles, and lymphatics.

Refer to each instrument's instructions for use (IFU) for additional indications, warnings, and specific contraindications.

The device has not been shown to be effective for tubal sterilization or tuball coagulation for sterilization procedures. Do not use this function for these procedures.

Target Patient Group

The intended patient population consists of adult and pediatric patients. Surgeons should consider specific patient factors before deciding if the device is suitable for use.

Clinical Benefits

The generator, when used with advanced bipolar devices, offers rapid dissection, coagulation, resection, and vessel sealing of tissues for indicated surgical procedures. It provides accurate control of electrical parameters, allowing to precisely dose the energy to the target tissue resulting in reliable vessel seals.

Contraindications

None known.

Intended Users

Intended users are medical professionals qualified for the particular technique and surgical procedure to be performed.

Undesirable Side Effects / Residual risk

While every attempt has been made to reduce patient and user risks, all surgeries using this generator and hardware accessories carry some residual risk, even when used by trained physicians. The potential adverse events associated with the use of electrosurgery includes, but is not limited to, the following risks:

- Thermal burn;
- Hemorrhage / bleeding;
- Electric Shocks;
- Laceration(s) (tissue damage);

How Supplied

VS01 is supplied in a semi-ready-to-use state. The shipping box contains the generator VS01, power cord and instructions for use.

Caution:

The foot switch is optional and packaged separately.

The advanced bipolar instrument is not included in this packaging and must be purchased separately.

Illustration and Nomenclature

Front Panel of the Generator

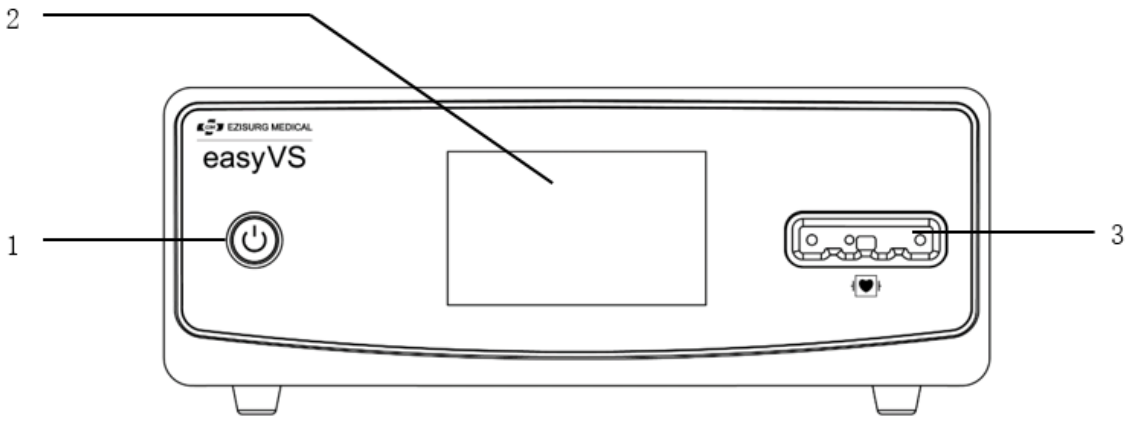

Figure 2 Front Panel of VS01

1、Power Button	Press the button to turn on the generator. Press the button again to turn it off
2、 Display/Touch screen	Display device information and serve as interface for adjusting controls and settings.
3、Instrument port	Receptacle used to attach the instrument connector.

Back Panel of the Generator

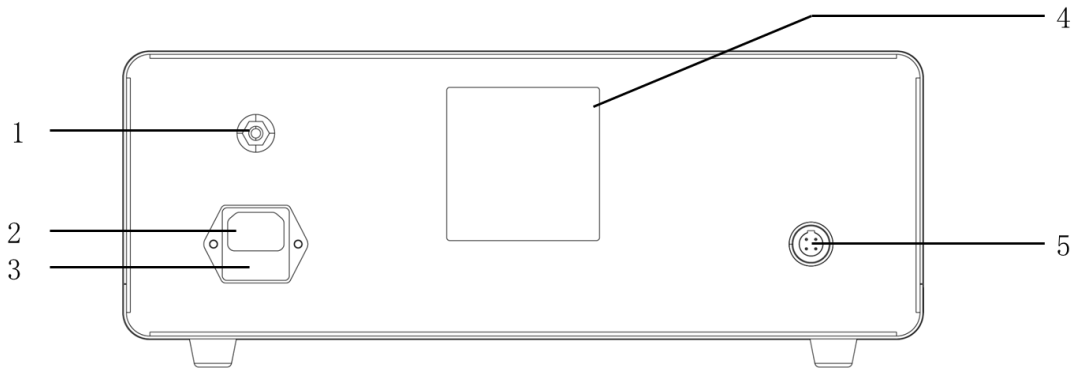

Figure 3 Back Panel of VS01

1、Potential equalization conductor terminal	Allow connection of the generator to the ground
2、AC mains receptacle	Connect the Power Cord
3、AC Fuse	/
4、Serial label	About overview of generator
5、Footswitch port	Connect the footswitch VFSU01

Footswitch

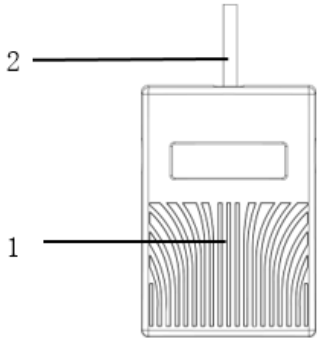

Figure 4 Footswitch

1、Petal	Activate generator for the energy output.
2、Footswitch connection cable	Connect to the generator.

Service Life

The generator VS01 has a service life of 5 years under normal use and preventive maintenance. If parts or accessories failed or are beyond their useful life there needs to replace them to continue use.

Customer Service

Warranty

Ezisurg Medical Co., Ltd warrants this product to be free from defects in material and workmanship under normal use and preventive maintenance for the respective warranty period shown below. Ezisurg Medical Co., Ltd's obligation under this warranty is limited to the repair or replacement, at its option, of any product, or part thereof, which has been returned to Ezisurg Medical Co., Ltd or its distributor within the applicable time period shown below and which examination disclosed, to Ezisurg Medical Co., Ltd's satisfaction, to be defective.

This warranty does not apply to any product, or part thereof, that has been:

1) Adversely affected due to use with devices manufactured or distributed by parties not authorized by Ezisurg Medical Co., Ltd;

2) Repaired or altered outside Ezisurg Medical Co., Ltd's factory in a way so as to, in Ezisurg Medical Co., Ltd's judgement, affect its stability or reliability;

3) Subjected to improper use, negligence or accident;

4) Used other than in accordance with the design and use parameters, instructions and guidelines for the product or with functional, operational or environmental standards for similar products generally accepted in the industry.

Ezisurg Medical Co., Ltd's products are warranted for the following periods after delivery to the original purchaser:

Generator VS01 (including power cord)	One (1) year, parts and labor
Footswitch VFSU01	One (1) year, parts and labor

Unless superceded by applicable local law, this warranty is in lieu of all other warranties, express or implied, including the warranties of merchantability and fitness for a particular purpose, and of all other obligations or liabilities on the part of Ezisurg Medical co., Ltd and is a purchaser's exclusive remedy. In no event shall Ezisurg Medical co., Ltd be liable for special, incidental or consequential damages including, without limitation, damages resulting from loss of use, profits, business or goodwill, other than as expressly provided by a specific law. Ezisurg medical co., ltd neither assumes nor authorizes any other person to assume for it any other liability in connection with the sale or use of any of Ezisurg Medical Co., Ltd's products. There are no warranties that extend beyond the terms hereof.

Ezisurg Medical Co., Ltd reserves the right to make changes to products built and/or sold by them at any time without incurring any obligation to make the same or similar changes on products previously built and/or sold by them.

Theory of Operation

The system (Generator and Device) is designed to provide a vessel sealing application and is widely used in various open and minimally invasive surgeries. It is an advanced bipolar electrosurgical generator system with no neutral electrode needed. Compared to traditional bipolar electrosurgical generator systems, this system is an all-in-one solution that combines tissue sensing, algorithm control, and mechanical cutting functions, offering higher safety, shorter surgery times, and more consistent surgical quality. The principle involves the advanced generator combining high-frequency electrical energy with the mechanical pressure of the jaw, causing the vascular tissue to absorb heat. Under the combined effect of pressure and thermal energy, the vascular tissue undergoes denaturation and fusion, forming a permanent closure band. A blade is then used to cut through the tissue, completing one vessel sealing procedure. The embedded software continuously monitors dynamic tissue impedance and automatically identifies real-time impedance variations, enabling adaptive adjustment of energy delivery for more precise and safer vessel sealing.

User may use footswitch. The action of footswitch is transmitted to generator. The generator controls power output according to the pedal stepped down.

Technical Specifications

Dimensions and Weight

VS01

Width	340mm±5mm
Depth	390mm±5mm
Height	135mm±5mm
Weight	＜8Kg

VFSU01

Length	112mm±5mm
Width	77mm±5mm
Height	35mm±5mm
Weight	＜0.5Kg

Environmental Parameters

- **Operation**

Ambient temperature range	10℃ ~ 40℃
Relative humidity	30% - 75% non-condensing
Atmospheric pressure	700hpa ~ 1060hpa

- **Transport and Storage**

Ambient temperature range	-35℃ ~ 54℃
Relative humidity	10% - 80% non-condensing
Atmospheric pressure	700hpa ~ 1060hpa
Warm-up time	If transported or stored at temperatures outside the operating temperature range, allow one hour for the generator to reach room temperature before use.

Duty Cycle

Under maximum-output settings and rated-load conditions (20 ohm load), the generator is suitable for activation times of 10 seconds on, 30 seconds off, for 1 hour. With lesser settings and loads, you can activate the generator for greater durations without generating excessive internal temperatures.

Internal Battery

Battery for RTC	Battery type - 3V lithium button cell
	Battery life - 5 years

Audio Volume

The stated audio levels are at a distance of one meter. Alert tones meet the requirements of IEC60601-2-2.

Activation Tone

The audio levels stated below are for activation tones and alert tones at a distance of one meter.

Volume	50 (-0/+10)dBa ~ 70 (- 0/+10) dBa
Frequency	200Hz ~ 3kHz
Duration	Continuous while the device is activated

Alert Tone

Volume	65 (-0/+10)dBa ~ 80 (- 0/+10) dBa
Frequency	200Hz ~ 3kHz

Potential Equalization Conductor Terminal

A potential equalization conductor terminal is provided to allow connection of the generator to the ground.

Input Power

Voltage	100-240 VAC
Frequency	50/60 Hz
Duration	Continuous while the device is activated
Maximum power at nominal line voltage	400VA
Maximum input current	5A
Fuse	5mm×20mm 8A,250V fast blow, high-breaking capacity

Power Cord

Plug Style	as needed by particular country requirements
Receptacle	IEC 60320 C13 with straight non-angled cord entry
Cord Length	5000±40mm
Current Rating	10A

Minimum conductor size cross-sectional area	1.0 mm^2 copper
Wiring	International

Standards and IEC Classifications

The generator meets all pertinent clauses of the IEC 60601-1 and IEC 60601-2-2.

Class of Protection Against Electric Shock	Class I
Degree of Protection Against Electric Shock	Defibrillation-proof Type CF Applied Part
Degree of Protection Against Harmful Ingress of Water	VS01: IPX1 VFSU01： IPX8
Operating Mode	Non-Continuous operation

NOTE: The applied part is defined as Jaws & shaft of the Sealer/Divider.

Output CAharacteristics

Frequency	434kHz±10%
Rated Load	20Ω
Duty Cycle	100%
Power	200W±20%
Current R.M.S (max)	5.5A
Open Circuit Peak Voltage(max)	250V
Crest Factor	1.5±20%
Heating factor	605A^2s

Caution: To avoid injury to the patient or surgical team, use only instruments rated for use at, or greater than, the maximum peak voltages listed below. For example, bipolar instruments must have voltage ratings of 250 V peak or greater, as shown in the "Open Circuit Peak Voltage (max)" column.

Output Waveforms

As tissue resistance increases throughout the seal cycle, the generator modulates current and voltage until tissue resistance meets seal complete requirements as needed. See

Figure 5 Diagram of output power versus impedance for the diagram of output power versus load resistance.

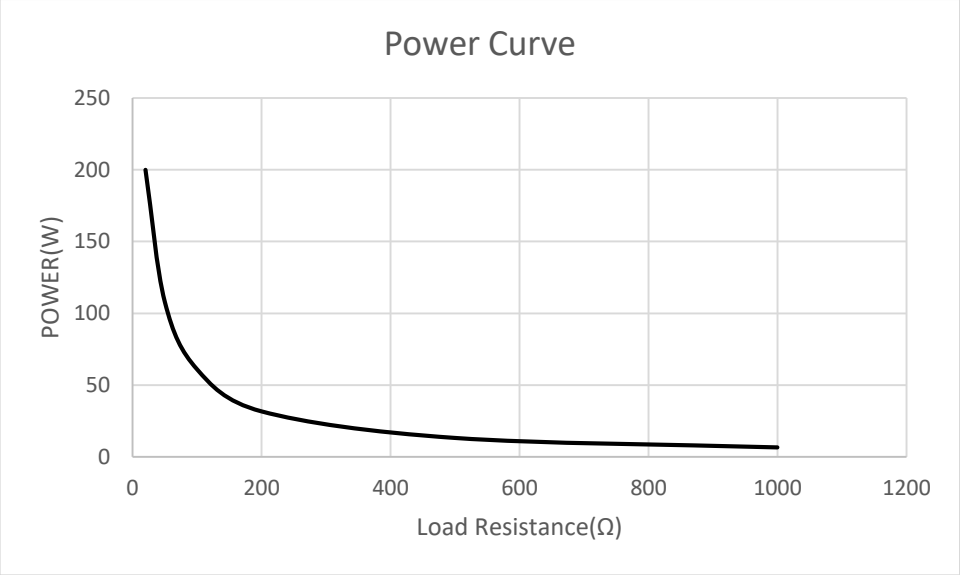

Figure 5 Diagram of output power versus impedance

Power Curve Limits / W			
Load (Ω)	nominal	high	low
20	200	240	160
50	108	129.6	86.4
100	61	73.2	48.8
200	31.7	38	25.4
500	13.2	15.8	10.6
1000	6.6	7.9	5.3

Essential Performance

The essential performance requirement per IEC 60601-1 does not apply to the generator.

Setup

Before Starting the Generator

WARNING: To avoid the risk of electric shock, this equipment must only be connected to supply mains with protective earth.

Do not connect wet instruments to the generator.

Do not use extension cords.

Do not wrap the instrument cords around metal objects.

Do not use instruments on vessels in excess of 7 mm in diameter.

1. Examine the generator VS01 with bipolar surgical instrument for damage. Do not use damaged devices and instruments.
2. Secure the generator on a cart or any other suitable fixture in the appropriate position.

3. If necessary, connect the equipotential grounding lug to a ground source.
4. Connect the power cord to the power cord receptacle on the back panel of the generator and to a grounded electrical outlet. The power requirements for the generator are listed on the label on its back panel.
5. Connect the footswitch connector to the footswitch receptacle on the back panel of the generator if applicable.
6. Connect the bipolar surgical instrument connector to receptacle on the front panel of the generator.

Powering Up the Generator

Turn on the generator by pressing the power button. The generator VS01 enters the startup interface. See Figure for the Startup Interface.

Figure 6 Startup Interface

1、Startup Progress Bar	Display startup progress
2、 Manufacturer's Trademark	Display the company's trademark name

Standby Screen

After startup, the generator enters the standby interface, awaiting user input. See Figure 7 for the standby interface.

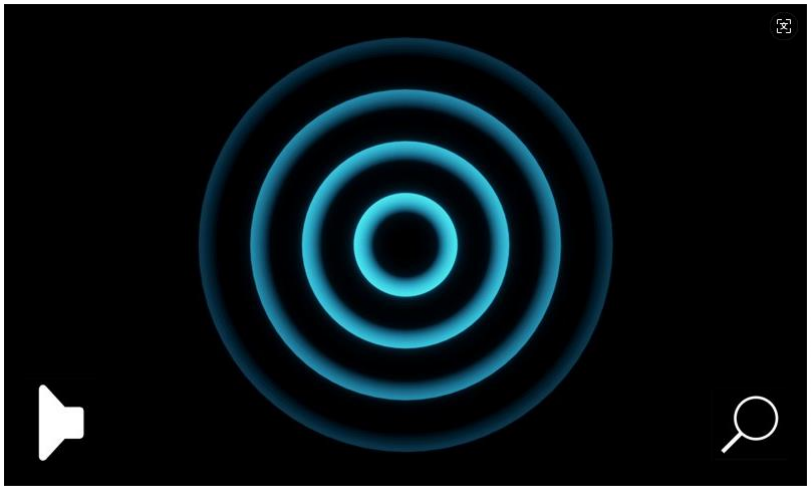

Figure 7 Standby Interface

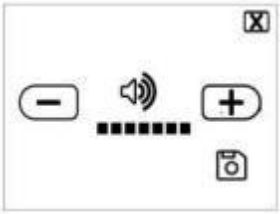	
Volume Adjustment	
From the main screen, tap the " " icon. Adjust the volume using the " " and " " keys, then tap the " " icon to save your settings.	
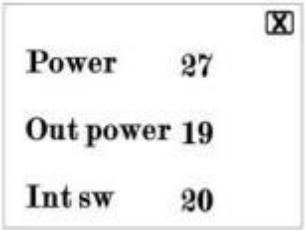	
Device output Information	
From the main screen, tap the " " icon to view the information of device output.	

Activation Screen

When the activation button in the bipolar instrument or the footswitch is pressed, the interface switches to the activation interface, indicating that energy is being delivered. See Figure for the activation interface. The activation interface is dynamic.

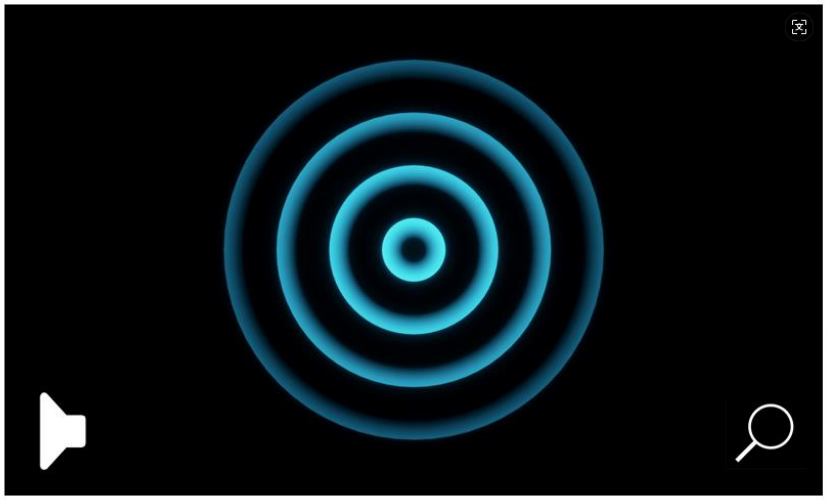

Figure 8 Activation Interface

Shutdown

Turn off the generator using the power button on the front panel of the generator.

Error Messages and Troubleshooting

WARNING: A failure of the VS01 could result in an unintended increase of output power.

When an information signal occurs, the device emits four intermittent beeps. The functional display interface will show the information signal message along with a list of corrective actions. Energy output is interrupted during the information signal condition but becomes available again immediately after the condition is resolved.

- **INCOMPLETE SEAL CYCLE- BREAK OFF**

Error Code: E101 **Root Cause:** The sealing cycle was interrupted before completion or the activation button in the bipolar instrument was released prematurely of the final tone.	
Display Interface: 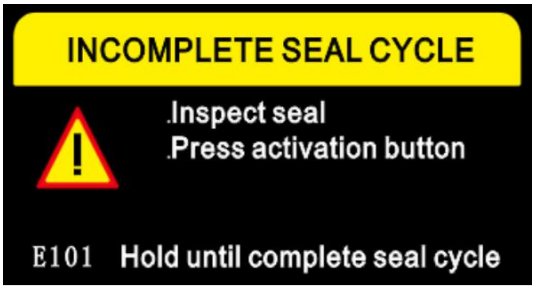 	**Troubleshooting Suggestions：** If this message appears, the user shall: 1. Release the activation button. 2. Open the instrument jaws and check if the seal is successful. 3. If the seal is incomplete, re-grasp the tissue (using the same jaw position or by placing the jaws as close as possible over the initial seal site). 4. Restart the sealing cycle.

- **INCOMPLETE SEAL CYCLE- SHORT CIRCUIT**

Error Code: E102 **Root Cause:** The generator has detected a short circuit between the jaws of the instrument—possibly due to contact with a metal object or excessive fluid around the surgical site.	
Display Interface: 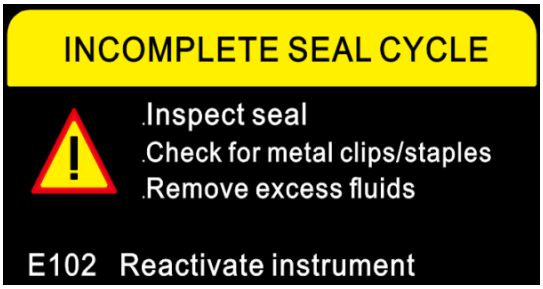 	**Troubleshooting Suggestions：** If this message appears, the user shall: 1. Release the activation button. 2. Check for any metal clips or staples. 3. Reposition the instrument to avoid metal contact. 4. Remove excess fluid from the surgical site. 5. Restart the sealing cycle.

- **INCOMPLETE SEAL CYCLE- OPEN CIRCUIT**

Error Code: E103 **Root Cause:** The bipolar instrument jaws are not fully closed, or the grasped tissue is too thin.	
Display Interface: 	**Troubleshooting Suggestions：** If this message appears, the user shall: 1. Release the activation button. 2. Open the instrument jaws and check if the seal is successful. 3. Re-grasp a thicker section of tissue whenever possible. 4. Ensure the instrument jaws are fully closed. 5. Restart the sealing cycle.

- **INCOMPLETE SEAL CYCLE- OVER TIME**

Error Code: E104 **Root Cause:** Additional time and energy are required to complete the sealing cycle.	
Display Interface:	**Troubleshooting Suggestions：** If this message appears, the user shall: 1. Release the activation button. 2. Open the instrument jaws and check if the seal is successful. 3. Remove excess fluid from the surgical site.

	4. Clean and dry the instrument jaws thoroughly. 5. Re-grasp a thicker section of tissue whenever possible. 6. Restart the sealing cycle.

After Surgery

1. Turn off the generator.
2. Disconnect the instrument from the front panel.

- If the instrument is single-use, dispose of it according to your hospital's policy.
- If the instrument is reusable, clean and sterilize it according to the manufacturer's Instructions for Use.

3. Unplug the power cord from the wall outlet by grasping the plug firmly. Do not pull on the cord.
4. Disconnect the foot switch from the back panel of the generator.
5. Store the generator, footswitch, and power cord appropriately.

Cleaning and Disinfection Instructions

WARNING: Always turn off and unplug the generator before cleaning.

The generator and footswitch can be cleaned and intermediate-level disinfected by wiping the device with disinfectant. An automated reprocessing or immersion cleaning and disinfection is not possible. For this device, routine decontamination should be performed on a daily basis.

Reprocessing procedures have only limited implications to the device. The limitation of the numbers of reprocessing procedures is therefore determined by the function / wear of the device. From the processing side, there is no maximum number of allowable reprocessing. The device should no longer be reused in case of dysfunction and/or signs of material degradation, e.g. damaged insulation or other change in the material, etc.

Remove gross soiling on the device with lint free towel wetted in cold water (<40°C) immediately after use. Don’t use a fixating detergent or hot water (>40°C) as this can cause the fixation of residuals which may influence the result of the reprocessing process.

If applicable, safely transport the device to the reprocessing area to avoid any damage and contamination to the environment.

Turn off the device before processing.

Follow the cleaning and disinfection steps below.

1. Wipe the surfaces of the device with one CaviWipes™1 towelette or a cloth wetted in other effective disinfectant which is approved for its efficacy by FDA and/or Health Canada approval, VAH/DGHM-listing, CE marking, etc., until the device surface is free of

visible soils. Prior to disinfection, confirm that no visible soil remains on the device.

2. Use a second CaviWipes ™1 towelette to thoroughly wet the surfaces. Repeated use of the towelette may be required to ensure that the surfaces remain visibly wet for 1 minute at room temperature.

3. Leave the surfaces to dry on its own.

Please follow the manufacturer's instructions of disinfectants.

Visual inspection for cleanliness of the products.

After the cleansing disinfection, a thorough inspection and maintenance ensures that the device is fit for use.

- Check that the device has no dents, cracks, deformations, scratches, etc.;
- Check all markings on the product for clear visibility.

Discard and replace any components as necessary.

Notes: Do not use the device with following defects: material deformation, damaged insulation or other change in the material, etc.

Test and maintain the device acc. to manufacturer's instruction.

Storage of processed products in a dry, clean and dust free environment at modest temperatures, refer to label and instructions for use.

Other instruments and accessories

For bipolar surgical Instrument handpiece, shears and other accessories, please see their user manual for instructions on cleaning, disinfection and sterilization.

Maintenance and Repair

Electrical Safety Checks

WARNING: Do not remove the generator cover. Contact qualified personnel for service.

Before performing optional maintenance or servicing the unit, disconnect the power plug form the power outlet in order to completely isolate the energy platform from mains power.

The hospital shall contact Ezisurg Medical Co., Ltd or an authorized Ezisurg Medical Co., Ltd service facility for periodically (at least once a year recommended) electrical safety check performed by qualified service personnel.

The generator VfS01 contains a Potential Equalization Terminal on the back panel. This is provided for compatibility with other medical systems requiring such connections. This conductor is not intended for protective earthing.

Do not open the generator performed by personnel out of Ezisurg Medical Co., Ltd or an authorized Ezisurg Medical Co., Ltd service facility. Open the generator voids the generator warranty.

Replace Main Fuses

If the generator VS01 failed to power on, please check the main fuse status. Locate the fuse holder on the back panel of the generator (See Figure 3). Remove the fuse holder and examine the fuse. If the fuse is broken, replace the fuse with the appropriate type and rating. Then insert the fuse holder. See "Input Power" for fuse type and rating.

Software Update

The generator VS01 software version may be displayed on the Display/Touch screen. If the software needs update, contact Ezisurg Medical Co., Ltd or an authorized Ezisurg Medical Co., Ltd service facility. Do not update the software by personnel out of Ezisurg Medical Co., Ltd or an authorized Ezisurg Medical Co., Ltd service facility.

Disposing of generator VS01 (Environmental Protection)

The generator VS01 and accessories must not be disposed of at the end of life with other waste. To recycle the waste equipment, contact Ezisurg Medical Co., Ltd or your local sales representative to discuss local waste disposal solutions and processes. The generator VS01 poses disposal risks similar to consumer electronics such as computers. There are no radioactive substances, batteries, or hazardous liquids that may leak in the generator VS01.

Precautions

1. Minimally invasive procedures should be performed only by persons have adequate training and familiarity with minimally invasive techniques. Consult medical literature relative to techniques, complications, and hazards prior to performance of any minimally invasive procedure.
2. Read the instructions, warnings, and precautions provided with this energy platform and associated accessories before using. Specific instructions for electrosurgical instruments are not included in this manual.
3. Minimally invasive instruments may vary from manufacturer to manufacturer. When minimally invasive instruments and accessories from different manufacturers are employed together in a procedure, verify compatibility prior to initiation of the procedure. Please check carefully on the invasive parts, especially on the surface roughness, sharp edges or outcrop, which might cause safety hazard of the surgery.
4. The device is not suitable for use in the presence of a flammable anesthetic mixture with air or with oxygen or nitrous oxide. It is possible to create sparks by hitting other metal instruments. Sparks may ignite flammable gases such as bowel gas.
5. When generator prompts error messages and/or error tones, please check for errors first.
6. As with all energy sources (Electrosurgery, Lasers, or Ultrasound) there are concerns about the carcinogenic and infectious potential of the by-products such as tissue smoke plume and aerosols. Appropriate measures such as protective eyewear, filtration masks, and effective smoke evacuation equipment should be used in both

open and laparoscopic procedures.

7. Do not bang or drop the instrument.
8. After removing the instrument, examine the tissue for hemostasis. If hemostasis is not present, appropriate techniques should be used to achieve hemostasis.
9. Do not operate the generator VS01 in a moist environment as a shock hazard may exist. If liquids have entered the generator VS01 the unit must be returned to the manufacturer for testing prior to use.
10. Do not operate the unit in close proximity to volatile solvents such as methanol or alcohol as explosion may occur.
11. Avoid use of generator VS01 adjacent to or stacked with other equipment. If adjacent or stacked use is necessary, monitor the generator VS01 and the other equipment to assure normal operation.
12. Use of accessories and cables other than those specified may result in unpredictable performance, increased electromagnetic emissions, or decreased electromagnetic immunity.
13. No internal user serviceable parts. For service, return the generator to Ezisurg Medical Co., Ltd or an authorized Ezisurg Medical Co., Ltd service facility.
14. To avoid the risk of electric shock, this equipment must only be connected to a supply mains with protective earth.
15. This device is not MR safe and is not MR compatible.
16. In case of device failure, ensure availability of the appropriate backup equipment relevant to the specific procedure.
17. The touch screen display of the generator is very sensitive. Do not use sharp metal objects on the touch screen.
18. Opening of the generator VS01 invalidates the warranty and could create hazardous condition.
19. Read instructions prior to use and follow the hospital’s clinical practice guidelines for ultrasonic surgery, electrosurgery, gynecology and laparoscopic procedures.
20. Replace fuses only with the appropriate type and rating.
21. Do not sterilize the generator VS01. Sterilization will damage the unit.
22. Do not restrict the openings on the bottom and the back panel of the generator VS01, as they provide the required airflow for cooling.
23. If electromagnetic interference with other equipment is suspected, reorient the device or remove possible sources of interference (for example, cellular phones, radios, etc.) from the room.
24. When the device is used together with endoscopic equipment, the patient leak current increase hazard may exist.
25. The VS01 shall not be serviced or maintained while in use with a patient.
26. Do not position the generator VS01 so that it is difficult to operate the disconnection device while the power cord separated.

27. No modification of this equipment is allowed.
28. Do not reboot the generator immediately (in less than 0.5s) after powering off the generator, it may cause the screen cannot start up normally.
29. Do not sterilize the generator VS01 and the footswitch VFSU01.
30. When an electrosurgical generator and physiological monitoring equipment are used simultaneously on the same patient, any monitoring electrodes should be placed as far away as possible from the active electrodes. Needle monitoring electrodes are not recommended. The use of monitoring systems with interference rejection and high-frequency current limiting capabilities is advised.
31. Position the electrosurgical instrument cables to prevent contact with the patient, other leads, conductors, or ground.
32. Exercise caution with patients who have implanted cardiac pacemakers or other metallic implants. Avoid pathways for the high-frequency current that pass near the implant site.
33. Ensure all instruments are connected correctly. All instruments connected to the generator must be kept dry, with no exposed metal parts at the connections.
34. During instrument activation, ensure the electrodes do not contact other surrounding metal components to prevent accidental injury.
35. In the event of a generator malfunction, it must be inspected by qualified personnel and reported to the manufacturer.
36. The potential equalization conductor terminal is provided for compatibility with other medical systems requiring such a connection. This terminal is not intended for use as a protective earth.
37. Do not allow any personnel other than those from Ezisurg Medical Co., Ltd or its authorized service agencies to disassemble the generator. Opening the generator housing will void the product warranty.
38. The generator and its associated accessories should be used within their designated service life. Use beyond this period is not recommended, as it may pose unforeseen risks.
39. Studies have shown that smoke generated during vessel sealing procedures can be potentially harmful to patients and the surgical team. These studies recommend adequately ventilating the smoke by using a surgical-smoke evacuator or other means.
40. Inspect instruments and cords (especially reusable instruments and cords) for breaks, cracks, nicks, and other damage before every use. If damaged, do not use. Failure to observe this precaution may result in injury or electrical shock to the patient or surgical team.
41. Device has not been evaluated in main vessels of the central circulatory system and is not intended for use in the following named vessels: arteriae pulmonales, aorta ascendens, arcus aortae, aorta descendens to the bifurcatio aortae, arteriae coronariae, arteria carotis communis, arteria carotis externa, arteria carotis interna, arteriae cerebrales, truncus brachiocephalicus, venae cordis, venae pulmonales,

vena cava superior, and vena cava inferior.

42. While in surgical procedures, the patient should not be allowed to come into direct contact with grounded metal objects (e.g., surgical-table frame, instrument table, etc.). If this is not possible during certain procedures (e.g., those in which noninsulated head frames are used), place dry gauze between the patient and the grounded object if possible.
43. Minimize skin-to-skin contact between parts of the patient's body by covering those areas with dry gauze
44. Avoid enriched O_2 and nitrous oxide (N_2O) atmospheres near the surgical site. Both O_2 and N_2O support combustion and may result in fires and burns to patients or surgical personnel.
45. Fluid in the body cavity should be kept to a minimum during treatment. Conductive fluids (for example, blood or saline) in direct contact with or near the instrument may carry electrical current or heat, which may cause unintended burns to the patient. Aspirate fluid from around the instrument jaws before activating the instrument.
46. While in use of instruments that produce electrical arcs between the active electrode and tissue may result in neuromuscular stimulation.
47. Store unused electrode in a location isolated from patients.
48. Laparoscopic surgery may result in gas embolism due to insufflation of gas in the abdomen.
49. Certain devices or accessories may present an unacceptable risk at low power settings. For example, with argon beam coagulation, the risk of gas embolism increases if there is insufficient high frequency power to produce a rapid, impermeable eschar on the target tissue.
50. When the system is used in conjunction with other systems (e.g., an endoscopic system), ensure that the other equipment is of Type CF or Type BF applied parts.
51. The use of non-flammable agents is recommended for optional maintenance wherever possible. If flammable agents are used, do not activate the energy platform until flammable vapors from skin-preparation solutions and tinctures have dissipated.
52. For surgical procedures where the current could flow through small cross-sectional area of the body, the use of bipolar techniques may be desirable to avoid unwanted tissue damage.

Conformance to Standards

This device conforms to the following international standards:

EN (IEC) 60601-1	Medical electrical equipment - Part 1: General requirements for basic safety and essential performance.
EN (IEC) 60601-1-2	Medical electrical equipment - Part 1-2: General requirements for basic safety and essential performance - Collateral standard: Electromagnetic compatibility - Requirements and tests.
EN (IEC) 60601-2-2	Medical electrical equipment - Part 2-2: Particular requirements for the basic safety and essential performance of high frequency

	surgical equipment and high frequency surgical accessories

Electromagnetic Compatibility (EMC)

Electromagnetic Emissions

Guidance and manufacturer's declaration – electromagnetic emissions		
The device is intended for use in the electromagnetic environment specified below. The customer or the user should assure that it is used in such an environment.		
Emissions test	Compliance	Electromagnetic environment – guidance
RF emissions CISPR 11	Group 1	The device must emit electromagnetic energy in order to perform its intended function. Nearby electronic equipment may be affected.
RF emissions CISPR 11	Class A	The device is suitable for use in all establishments other than domestic and those directly connected to the public low-voltage power supply network that supplies buildings used for domestic purposes.
Harmonic emissions IEC 61000-3-2	Class A	
Voltage fluctuations/flicker emissions IEC 61000-3-3	Not applicable	

Electromagnetic Immunity

Guidance and manufacturer's declaration – electromagnetic immunity			
The device is intended for use in the electromagnetic environment specified below. The customer or the user should assure that it is used in such an environment.			
IMMUNITY test	IEC 60601 test level	Compliance level	Electromagnetic environment-guidance
ESD IEC 61000-4-2	±8kV contact ±15kV air	±8kV contact ±15kV air	Floors should be wood, concrete or ceramic tile. If floors are covered with synthetic material, the relative humidity should be at least 30 %.
Electrical fast transient/burst IEC 61000-4-4	±2kV for power supply lines	±2kV for power supply lines	Mains power quality should be that of a typical commercial or hospital environment.
Surge IEC 61000-4-5	±1kV line to line ±2kV line to earth	±1kV line to line ±2kV line to earth	Mains power quality should be that of a typical commercial or hospital environment.
Voltage dips, short interruptions and voltage variations on power supply input lines IEC 61000-4-11	0%U_T, 0.5cycle (At 0°, 45°, 90°, 135°, 180°, 225°, 270° and 315°) 0%U_T, 1 cycle 70%U_T, 25/30 cycles Single phase: at 0° 0%U_T, 250/300 cycles	0%U_T, 0.5cycle (At 0°, 45°, 90°, 135°, 180°, 225°, 270° and 315°) 0%U_T, 1 cycle 70%U_T, 25/30 cycles Single phase: at 0° 0%U_T, 250/300 cycles	Mains power quality should be that of a typical commercial or hospital environment.
Power frequency (50/60 Hz) magnetic field IEC 61000-4-8	3A/m	3A/m	Power frequency magnetic fields should be at levels characteristic of a typical location in a typical commercial or hospital environment.
Conducted RF IEC 61000-4-6	3 Vrms 150 kHz to 80 MHz	3 Vrms 150 kHz to 80 MHz	Portable and mobile RF communications equipment should

Radiated RF IEC 61000-4-3	3 V/m 80 MHz to 2,7 GHz	3 V/m 80 MHz to 2,7 GHz	be used no closer to any part of the device, including cables, than the recommended separation distance calculated from the equation applicable to the frequency of the transmitter. Recommended separation distance: $d = 1.2\sqrt{P}$ $d = 1.2\sqrt{P}$ 80MHz to 800MHz $d = 2.3\sqrt{P}$ 800MHz to 2.7GHz where P is the maximum output power rating of the transmitter in watts (W) according to the transmitter manufacturer and d is the recommended separation distance in meters (m). Field strengths from fixed RF transmitters, as determined by an electromagnetic site survey, should be less than the compliance level in each frequency range. Interference may occur in the vicinity of equipment marked with the following symbol:
NOTE 1: At 80 MHz and 800 MHz, the higher frequency range applies. NOTE 2: These guidelines may not apply in all situations. Electromagnetic propagation is affected by absorption and reflection from structures, objects and people.			
[a] Field strengths from fixed transmitters, such as base stations for radio (cellular/cordless) telephones and land mobile radios, amateur radio, AM and FM radio broadcast and TV broadcast cannot be predicted theoretically with accuracy. To assess the electromagnetic environment due to fixed RF transmitters, an electromagnetic site survey should be considered. If the measured field strength in the location in which device is used exceeds the applicable RF compliance level above, the device should be observed to verify normal operation. If abnormal performance is observed, additional measures may be necessary, such as re-orienting or relocating the device. [b] Over the frequency range 150 kHz to 80 MHz, field strengths should be less than 3 V/m.			

Recommended separation distances between portable and mobile RF communications equipment and this device

Recommended separation distances between portable and mobile RF communications equipment and this device.			
The device is intended for use in an electromagnetic environment in which radiated RF disturbances are controlled. The customer or the user of the system can help prevent electromagnetic interference by maintaining a minimum distance between portable and mobile RF communications equipment (transmitters) and the system as recommended below, according to the maximum output power of the communications equipment.			
Rated maximum output power of transmitter W	Separation distance according to frequency of transmitter (m)		
	150 kHz to 80 MHz $d = 1.2\sqrt{P}$	80 MHz to 800 MHz $d = 1.2\sqrt{P}$	800 MHz to 2.7 GHz $d = 2.3\sqrt{P}$
0.01	0.12	0.12	0.23
0.1	0.38	0.38	0.73
1	1.2	1.2	2.3
10	3.8	3.8	7.3
100	12	12	23
For transmitters rated at a maximum output power not listed above, the recommended separation distance d in metres (m) can be estimated using the equation applicable to the frequency of the transmitter, where P is the maximum output power rating of the transmitter in watts (W) according to the transmitter manufacturer. NOTE 1: At 80 MHz and 800 MHz, the separation distance for the higher frequency range applies. NOTE 2: These guidelines may not apply in all situations. Electromagnetic propagation is affected by absorption and reflection from structures, objects and people.			

Sterilization

The generator is packaged non-sterile.

The footswitch is packaged non-sterile.

Contact information

Ezisurg Medical Co., Ltd.

No.399, Miaoqiao Rd., Pudong New District, 201315 Shanghai, P.R. China

Website:www.ezisurg.com

Tel.1: 4000906176

Tel.2: +86-21-50456176

Fax: +86-21-50676156

EU REP

Shanghai International Holding Corp. GmbH (Europe)

Add: Eiffestrasse 80, 20537 Hamburg, Germany

Tel: +49-40-2513175

Fax: +49-40-255726

For a patient/ user/ third party in the European Union and in countries with identical regulatory regime (Regulation (EU) 2017/745 on Medical Devices); if, during the use of this device or as a result of its use, a serious incident has occurred, please report it to the manufacturer and/ or its authorized representative and to your national authority.

The contacts of national competent authorities (Vigilance Contact Points) and further information can be found on the following European Commission website: https://ec.europa.eu/growth/sectors/medical-devices/contacts_en

For additional information, contact your Ezisurg Medical Co., Ltd. Sales Representative or Ezisurg Medical Co., Ltd. Customer Service.

Symbols

	Caution	Affix on the device label and the front panel

	Caution	On the rear panel
	Caution	Affix on the footswitch
	Keep dry	Affix on the device package
	Fragile handle with care	Affix on the device package
	This way up	Affix on the device package
	Keep away from sunlight	Affix on the device package
	Temperature limit	Affix on the device package
	Humidity limitation	Affix on the device package
	Atmospheric pressure limitation	Affix on the device package
	Use no hooks	Affix on the device package
	Stacking limit by number	Affix on the device package
REF	Model number	Affix on the device label and bar code label

SN	Serial Number	Affix on the bar code label
CN	Date of manufacture Country of manufacture: CHINA	Affix on the device label and bar code label
	Manufacturer	Affix on the device label
EU REP	Authorized representative in the European Community	Affix on the device label
	Return waste to a collection system or treatment and recycling facilities. Applicable in EU. Follow decontamination instructions before returning waste.	Affix on the device label
	Refer to instruction manual/booklet	Affix on the device label
CE 0197	Device meets the requirements of Medical Device Regulation (EU) 20 17/745. 0197 is the code of notified body TUV Rheinland.	Affix on the device label
	Equipotentiality	Affix on the device label
	Fuse	Affix on the fuse label
	Foot switch	Affix on the device label

	Defibrillation-proof Type CF Applied Part	Affix on the front panel
UDI	Unique device identifier	Affix on the bar code label
www.ezisurg.com	Consult instructions for use or consult electronic instructions for use	Affix on the transport package label
MD	Medical device	Affix on the bar code label and transport package label
IPX1	Ingress Protection	Affix on the generator label
IPX8	Ingress Protection	Affix on the footswitch label
	Package quantity	Affix on the transport package label
	Unit produces non-ionizing radiation	Affix on the device label
	Importer	